stainless steel

LH/RH

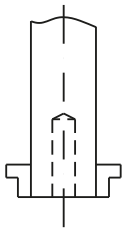

Key D3/S page 2-55.

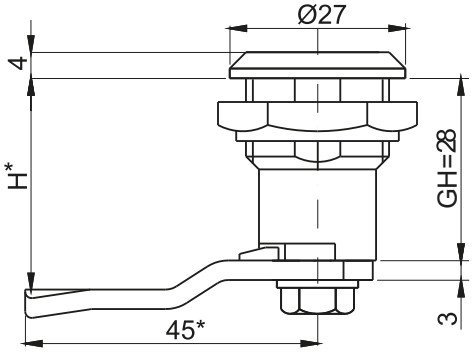

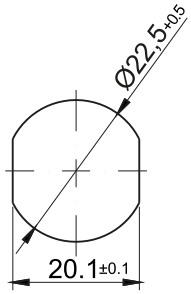

Cut out

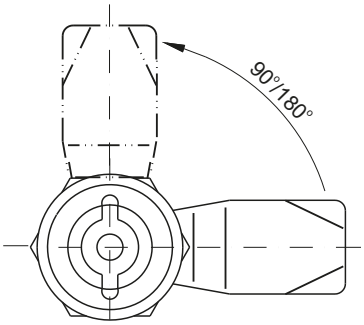

Left version

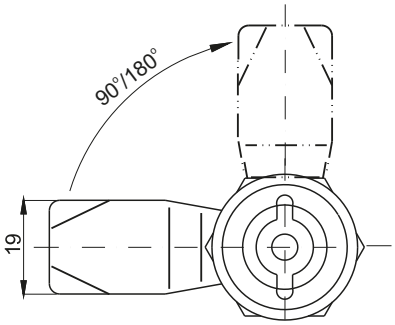

Right version

TYPE OF LOCK	COMPONENTS	MATERIAL	FINISH [C]
			Chrome
ZZR28/S	Housing, insert	Brass	01
	Cam	Steel zinc plated	-
ZZR28/S SN	Housing, insert	Stainless steel	-
	Cam	Stainless steel	-

How to order : ZZR28/S — D3/S — H.G — L — 90 — C

- Type of lock
- Type of insert
- Height cam H (page 1C-9 - 1C-22)
- Version (L- left, P-right)
- Opening angle (90°, 180°)
- Finish

* possibility to make in another dimension

Note:
A key KL DS/3 can be ordered for the lock, which is designed to prevent the ZZR from being pulled out of the lock when turned to the "open" position.
The lock can be used with 3-point cam with a limiter pg. 1C-17, 1C-18
H.G- dimension of the cam bend (H- height of the lock, G-group)

Lock compatible with cams from groups 11,13,18, 31, 33, 38, JZ-002, JK-1610.01 (pg.1C-9 1C-22).